INNOVATION

Net prices, valid until 31.07.2015

Garant®

STRONGER, MORE PRECISE, HIPERDRILL.

GARANT – the high performance interchangeable head drill for highest requirements.

Hoffmann Group®

Tools to make you better

GARANT HiPer drill

AN OVERVIEW OF THE SYSTEM

Unimpeded chipflow

Better machinability, for example in construction steel and stainless steel.

Comprehensive range

Diameter: 13 mm – 32 mm
(13 mm – 20 mm in 0.1 mm increments, and all relevant core hole and reaming diameters).

Length ratios:
1.5×D
3.0×D
5.0×D
8.0×D
12.0×D new

Lettering

Stating the max. boring depth, spare parts, and tightening torques.

Flange for optimum attachment

For increased stability during drilling.

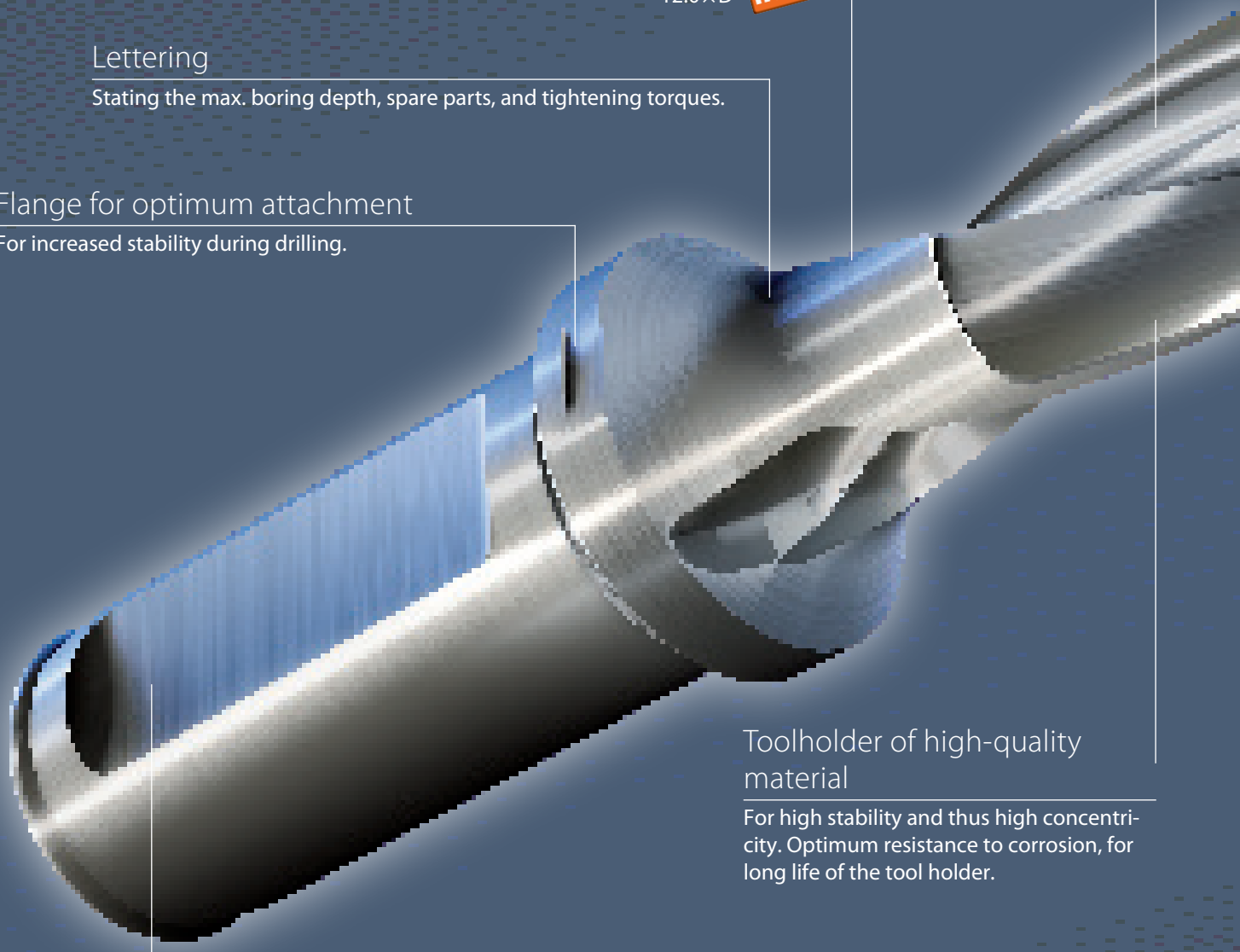

Toolholder of high-quality material

For high stability and thus high concentricity. Optimum resistance to corrosion, for long life of the tool holder.

Plain shank with clamping surface

Secure clamping with optimum power transmission. Shank tolerance = h6.

Maximum precision and performance

PERFORMANCE

Material: St50-2 (1.0050)
Drill: 231610_15
Insert: 231640_15
V_c: 130 m/min
f_z: 0.25 mm/U
Depth of hole: 80 mm
Drilling operations: 1000

Material: Hardox 500
Drill: 231605_13
Insert: 231640_13
V_c: 30 m/min
f_z: 0.15 mm/U
Depth of hole: 40 mm
Drilling operations: 40

Material: Superduplex (1.4501)
Drill: 231615_19
Insert: 31650_19,5
V_c: 45 m/min
f_z: 0.15 mm/U
Depth of hole: 100 mm
Drilling operations: 15

Material: Inconel 718
Drill: 231605_13
Insert: 231650_13
V_c: 35 m/min
f_z: 0.15 mm/U
Depth of hole: 40 mm
Drilling operations: 16

Precision

GARANT HiPer drill provides a degree of precision similar to a solid carbide drill, but is markedly more precise than a HSS drill or indexable drill.

(Example: A drill with a ∅ of 18 mm produces a hole of between 18.052 and 18.088 mm.)

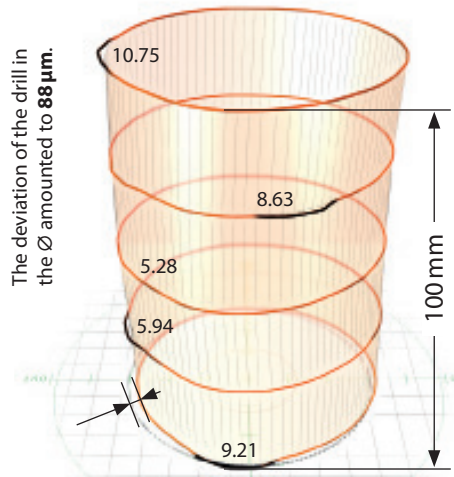

GARANT HiPer drill – ∅ concentricity over all measured holes **10.08 µm**.

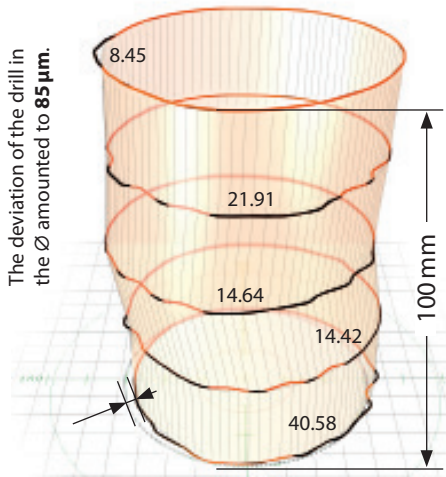

Competition – ∅ concentricity over all measured holes **33 µm**.

HiPer drill: high-performance interchangeable head drill

SIMPLE. RELIABLE. PRECISE.

Version:
- Very high feed rates and maximum performance due to optimally matched geometries and materials.
- Base body with plain shank to ISO 9766 (WELDON).
- Internal coolant supply for reliable chip evacuation and for optimum cooling of the cutting edge.
- Precise positioning of the cutter insert due to Vee insert seating and secure clamping by the centric bore.
- High concentricity when assembled.
- Shank support for optimum stability in operation.

23 1610 – Centring bore recommended.
23 1615/20 – Pilot hole necessary.

Application: For stationary and rotating use.

Supplied with: Drill with clamping wrench and insert screws.

Note: For optimum concentricity please clamp in a hydraulic chuck, e.g. No. 30 2026 size 20. For optimum stability always clamp the drill with the shortest possible overhang.

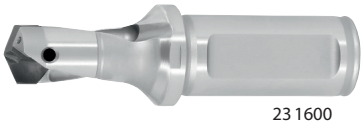
23 1600

23 1605

23 1610

23 1615

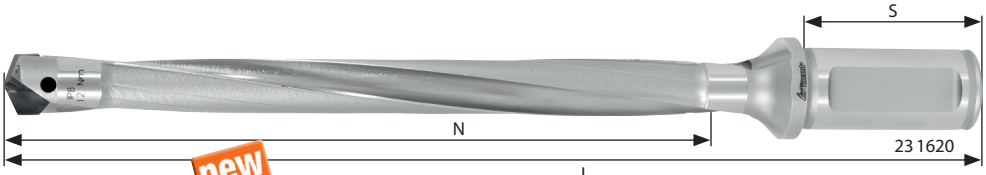

23 1620

new

Size = ⌀ D	21S 23 1600	21S 23 1605	21S 23 1610	21S 23 1615	21S 23 1620	⌀ range D from – to	N					L_{tot}					$D_s \times S$
	Garant Interchangeable head base body						23 1600	23 1605	23 1610	23 1615	23 1620	23 1600	23 1605	23 1610	23 1615	23 1620	
mm	1,5×D	3×D	5×D	8×D	12×D	mm	mm	mm	mm	mm	mm	mm	mm	mm	mm	mm	
13	XXX	XXX	XXX	XXX	XXX	13 – 13.49	21	41	68	108	162	91	112	138	178	232	16×48
13,5	XXX	XXX	XXX	XXX	XXX	13.5 – 13.99	21	42	70	112	168	92	113	141	183	239	16×48
14	XXX	XXX	XXX	XXX	XXX	14 – 14.49	22	44	73	116	174	93	116	144	187	245	16×48
14,5	XXX	XXX	XXX	XXX	XXX	14.5 – 14.99	23	45	75	120	180	95	117	147	192	252	16×48
15	XXX	XXX	XXX	XXX	XXX	15 – 15.99	24	48	80	128	192	99	124	155	203	267	20×50
16	XXX	XXX	XXX	XXX	XXX	16 – 16.99	26	51	85	136	204	102	128	161	212	280	20×50
17	XXX	XXX	XXX	XXX	XXX	17 – 17.99	27	54	90	144	216	105	132	168	222	294	20×50
18	XXX	XXX	XXX	XXX	XXX	18 – 18.99	29	57	95	152	228	114	142	180	237	313	25×56
19	XXX	XXX	XXX	XXX	XXX	19 – 19.99	30	60	100	160	240	116	146	186	246	326	25×56
20	XXX	XXX	XXX	XXX	XXX	20 – 20.99	32	63	105	168	252	119	151	192	255	339	25×56
21	XXX	XXX	XXX	XXX	XXX	21 – 21.99	33	66	110	176	264	121	155	198	264	352	25×56
22	XXX	XXX	XXX	XXX	XXX	22 – 22.99	35	69	115	184	276	125	159	205	274	366	25×56
23	XXX	XXX	XXX	XXX	XXX	23 – 23.99	36	72	120	192	288	127	163	211	283	379	25×56
24	XXX	XXX	XXX	XXX	XXX	24 – 24.99	38	75	125	200	300	134	171	221	296	396	32×60
25	XXX	XXX	XXX	XXX	XXX	25 – 25.99	39	78	130	208	312	136	176	227	305	409	32×60
26	XXX	XXX	XXX	XXX	XXX	26 – 26.99	41	81	135	216	324	139	180	233	314	422	32×60
27	XXX	XXX	XXX	XXX	XXX	27 – 27.99	42	84	140	224	336	142	184	240	324	436	32×60
28	XXX	XXX	XXX	XXX	XXX	28 – 28.99	44	87	145	232	348	145	188	246	333	449	32×60
29	XXX	XXX	XXX	XXX	XXX	29 – 29.99	45	90	150	240	360	147	192	252	342	462	32×60
30	XXX	XXX	XXX	XXX	XXX	30 – 30.99	47	93	155	248	372	150	197	258	351	475	32×60
31	XXX	XXX	XXX	XXX	XXX	31 – 31.99	48	96	160	256	384	152	201	264	360	488	32×60
32	XXX	XXX	XXX	XXX	XXX	32 – 32.99	50	99	165	264	396	156	205	271	370	502	32×60

v_c = m/min	Alu plastics	Alu	Alu cast >10% Si	<500 N	<750 N	<900 N	<1100 N	<1400 N	TOOLOX® 33 HRC	TOOLOX® 44 HRC	HARDOX® 500 <1600 N	INOX <900 N	INOX >900 N	Ti >850 N	Inconel®	GG(G)	CuZn	Uni		max	min		Air
ISO-Code:	N	N	N	P	P	P	P	P	H	H	H	M	M	S	S	K	N						
23 1640 –				130	110	100	90	75	40	35	30					80				●			
23 1650 –	200	200	150									65	55	30	35					●			

Version: Interchangeable carbide inserts for GARANT HiPer drill.
Vee ground cutter inserts for precise positioning and stable seating.
Concentricity when assembled ≤ 20 µm.
For holes up to IT9 accuracy.

- In the diameter range of 13 – 20 mm, in 0.1 mm increments.
- All metric core hole Ø from M16 – M36.
- All common sizes incl. heat exchanger diameters.
- Special sizes up to Ø 32.75 mm possible on request.

23 1640 – Tolerance m7.
23 1650 – Tolerance h7.

Application:
23 1640 – For steel and cast materials.
23 1650 – For stainless and aluminium materials.

Note: Cutting data apply to drilling bodies 5 × D.

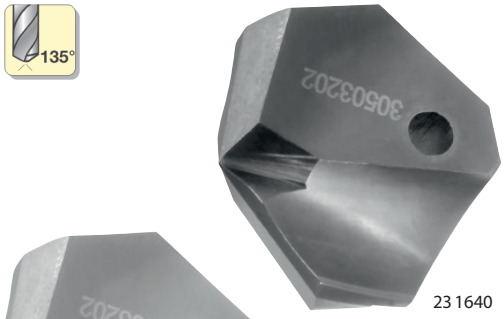

23 1640

23 1650

NEW 1/10 mm

Size = Ø D	21M 23 1640	21M 23 1650	Base element No. 23 1600 23 1605 23 1610 23 1615 23 1620	<900 N	INOX >900 N	Insert screws No. 23 1999
	Garant HiPer drill interchangeable head					
mm	HB 7530	HB 7630	Size	mm/U	mm/U	Size
13	XXX	XXX	13	0.20	0.14	7IP
13,1	XXX	XXX	13	0.20	0.14	7IP
13,2	XXX	XXX	13	0.20	0.14	7IP
13,3	XXX	XXX	13	0.20	0.14	7IP
13,4	XXX	XXX	13	0.20	0.14	7IP
13,5	XXX	XXX	13.5	0.21	0.15	7IP
13,6	XXX	XXX	13.5	0.21	0.15	7IP
13,7	XXX	XXX	13.5	0.21	0.15	7IP
13,8	XXX	XXX	13.5	0.21	0.15	7IP
13,9	XXX	XXX	13.5	0.21	0.15	7IP
14	XXX	XXX	14	0.22	0.15	8IP
14,1	XXX	XXX	14	0.22	0.15	8IP
14,2	XXX	XXX	14	0.22	0.15	8IP
14,3	XXX	XXX	14	0.22	0.15	8IP
14,4	XXX	XXX	14	0.22	0.15	8IP
14,5	XXX	XXX	14.5	0.23	0.16	8IP
14,6	XXX	XXX	14.5	0.23	0.16	8IP
14,7	XXX	XXX	14.5	0.23	0.16	8IP
14,75	XXX	XXX	14.5	0.23	0.16	8IP
14,8	XXX	XXX	14.5	0.23	0.16	8IP
14,9	XXX	XXX	14.5	0.23	0.16	8IP
15	XXX	XXX	15	0.23	0.16	8IP
15,1	XXX	XXX	15	0.23	0.16	8IP
15,2	XXX	XXX	15	0.23	0.16	8IP
15,25	XXX	XXX	15	0.23	0.16	8IP
15,3	XXX	XXX	15	0.23	0.16	8IP
15,4	XXX	XXX	15	0.23	0.16	8IP
15,5	XXX	XXX	15	0.24	0.17	8IP
15,6	XXX	XXX	15	0.24	0.17	8IP
15,7	XXX	XXX	15	0.24	0.17	8IP
15,8	XXX	XXX	15	0.24	0.17	8IP

Size = Ø D	21M 23 1640	21M 23 1650	Base element No. 23 1600 23 1605 23 1610 23 1615 23 1620	<900 N	INOX >900 N	Insert screws No. 23 1999
	Garant HiPer drill interchangeable head					
mm	HB 7530	HB 7630	Size	mm/U	mm/U	Size
15,9	XXX	XXX	15	0.24	0.17	8IP
16	XXX	XXX	16	0.25	0.17	8IP1
16,1	XXX	XXX	16	0.25	0.17	8IP1
16,2	XXX	XXX	16	0.25	0.17	8IP1
16,25	XXX	XXX	16	0.25	0.18	8IP1
16,3	XXX	XXX	16	0.25	0.18	8IP1
16,4	XXX	XXX	16	0.25	0.18	8IP1
16,5	XXX	XXX	16	0.26	0.18	8IP1
16,6	XXX	XXX	16	0.26	0.18	8IP1
16,7	XXX	XXX	16	0.26	0.18	8IP1
16,75	XXX	XXX	16	0.26	0.18	8IP1
16,8	XXX	XXX	16	0.26	0.18	8IP1
16,9	XXX	XXX	16	0.26	0.18	8IP1
17	XXX	XXX	17	0.27	0.19	8IP1
17,1	XXX	XXX	17	0.27	0.19	8IP1
17,2	XXX	XXX	17	0.27	0.19	8IP1
17,3	XXX	XXX	17	0.27	0.19	8IP1
17,4	XXX	XXX	17	0.27	0.19	8IP1
17,5	XXX	XXX	17	0.27	0.19	8IP1
17,6	XXX	XXX	17	0.27	0.19	8IP1
17,7	XXX	XXX	17	0.28	0.19	8IP1
17,8	XXX	XXX	17	0.28	0.19	8IP1
17,9	XXX	XXX	17	0.28	0.19	8IP1
18	XXX	XXX	18	0.28	0.20	8IP1
18,1	XXX	XXX	18	0.28	0.20	8IP1
18,2	XXX	XXX	18	0.28	0.20	8IP1
18,25	XXX	XXX	18	0.28	0.20	8IP1
18,3	XXX	XXX	18	0.28	0.20	8IP1
18,4	XXX	XXX	18	0.28	0.20	8IP1
18,5	XXX	XXX	18	0.29	0.20	8IP1
18,6	XXX	XXX	18	0.29	0.20	8IP1

GARANT HiPer drill

THE ADVANTAGES AT A GLANCE

Performance: Very long tool life at high cutting speeds and high feed rates.

Accuracy: Holes up to IT9 tolerance.

Precision: Unsurpassed in its class regarding concentricity and straightness of the hole.

Flexibility: Many different head ∅ with a maximum diameter change of 1 mm can be used in one holder.

Efficiency: Quick and easy change of a worn insert due to the interchangeable head system. No need for renewed measuring or set up.

Stability: The Vee insert seating ensures exact positioning.

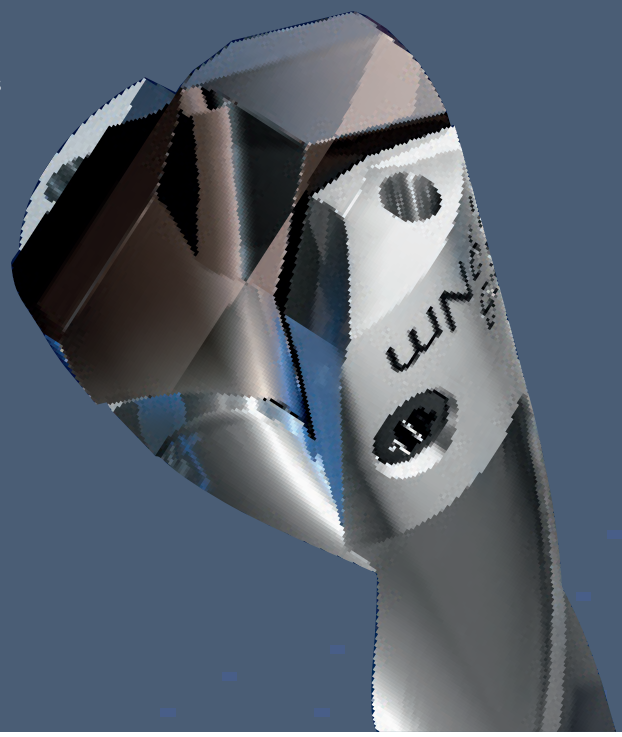

Everything you need to know in 4:09 minutes

ho7.eu/
HiPer-Drill

Size = ∅ D	21M 23 1640	21M 23 1650	Base element No. 23 1600 23 1605 23 1610 23 1615 23 1620	< 900 N	INOX > 900 N	Insert screws No. 23 1999
	Garant HiPer drill interchangeable head					
mm	HB 7530	HB 7630	Size	mm/U	mm/U	Size
18,7	XXX	XXX	18	0.29	0.20	8IP1
18,8	XXX	XXX	18	0.29	0.20	8IP1
18,9	XXX	XXX	18	0.29	0.20	8IP1
19	XXX	XXX	19	0.30	0.21	9IP
19,1	XXX	XXX	19	0.30	0.21	9IP
19,2	XXX	XXX	19	0.30	0.21	9IP
19,25	XXX	XXX	19	0.30	0.21	9IP
19,3	XXX	XXX	19	0.30	0.21	9IP
19,4	XXX	XXX	19	0.30	0.21	9IP
19,5	XXX	XXX	19	0.30	0.21	9IP
19,6	XXX	XXX	19	0.30	0.21	9IP
19,7	XXX	XXX	19	0.30	0.21	9IP
19,75	XXX	XXX	19	0.30	0.21	9IP
19,8	XXX	XXX	19	0.30	0.21	9IP
19,9	XXX	XXX	19	0.30	0.21	9IP
20	XXX	XXX	20	0.31	0.22	9IP
20,4	XXX	XXX	20	0.31	0.22	9IP
20,5	XXX	XXX	20	0.32	0.22	9IP
20,7	XXX	XXX	20	0.32	0.22	9IP
20,75	XXX	XXX	20	0.32	0.22	9IP
21	XXX	XXX	21	0.32	0.23	9IP
21,5	XXX	XXX	21	0.33	0.23	9IP
21,7	XXX	XXX	21	0.33	0.23	9IP
22	XXX	XXX	22	0.33	0.23	10IP
22,25	XXX	XXX	22	0.34	0.24	10IP
22,5	XXX	XXX	22	0.34	0.24	10IP
22,7	XXX	XXX	22	0.34	0.24	10IP
22,75	XXX	XXX	22	0.34	0.24	10IP
23	XXX	XXX	23	0.35	0.24	10IP
23,25	XXX	XXX	23	0.35	0.24	10IP
23,5	XXX	XXX	23	0.35	0.25	10IP

Size = ∅ D	21M 23 1640	21M 23 1650	Base element No. 23 1600 23 1605 23 1610 23 1615 23 1620	< 900 N	INOX > 900 N	Insert screws No. 23 1999
	Garant HiPer drill interchangeable head					
mm	HB 7530	HB 7630	Size	mm/U	mm/U	Size
23,7	XXX	XXX	23	0.36	0.25	10IP
23,75	XXX	XXX	23	0.36	0.25	10IP
24	XXX	XXX	24	0.36	0.25	10IP
24,5	XXX	XXX	24	0.37	0.26	10IP
24,7	XXX	XXX	24	0.37	0.26	10IP
24,75	XXX	XXX	24	0.37	0.26	10IP
25	XXX	XXX	25	0.38	0.26	15IP
25,4	XXX	XXX	25	0.38	0.27	15IP
25,5	XXX	XXX	25	0.38	0.27	15IP
25,7	XXX	XXX	25	0.38	0.27	15IP
26	XXX	XXX	26	0.38	0.27	15IP
26,5	XXX	XXX	26	0.39	0.27	15IP
27	XXX	XXX	27	0.40	0.28	15IP
27,5	XXX	XXX	27	0.40	0.28	15IP
27,75	XXX	XXX	27	0.40	0.28	15IP
28	XXX	XXX	28	0.41	0.29	15IP1
28,25	XXX	XXX	28	0.41	0.29	15IP1
28,5	XXX	XXX	28	0.42	0.29	15IP1
29	XXX	XXX	29	0.42	0.30	15IP1
29,5	XXX	XXX	29	0.34	0.30	15IP1
30	XXX	XXX	30	0.44	0.31	15IP1
30,25	XXX	XXX	30	0.44	0.31	15IP1
30,5	XXX	XXX	30	0.44	0.31	15IP1
30,75	XXX	XXX	30	0.44	0.31	15IP1
31	XXX	XXX	31	0.45	0.31	20IP
31,5	XXX	XXX	31	0.45	0.31	20IP
32	XXX	XXX	32	0.45	0.32	20IP
32,75	XXX	XXX	32	0.46	0.32	20IP

Highest performance

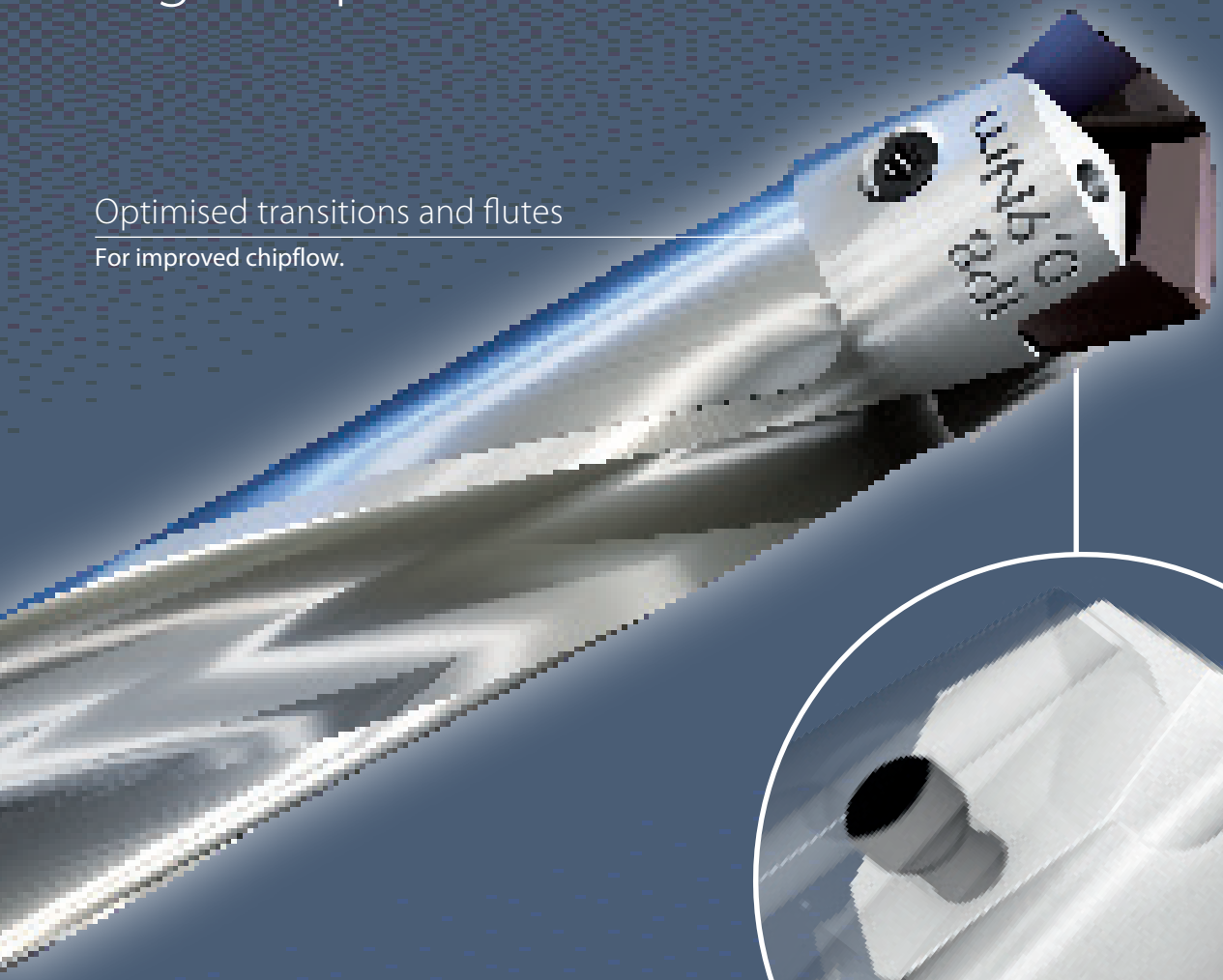

Optimised transitions and flutes

For improved chipflow.

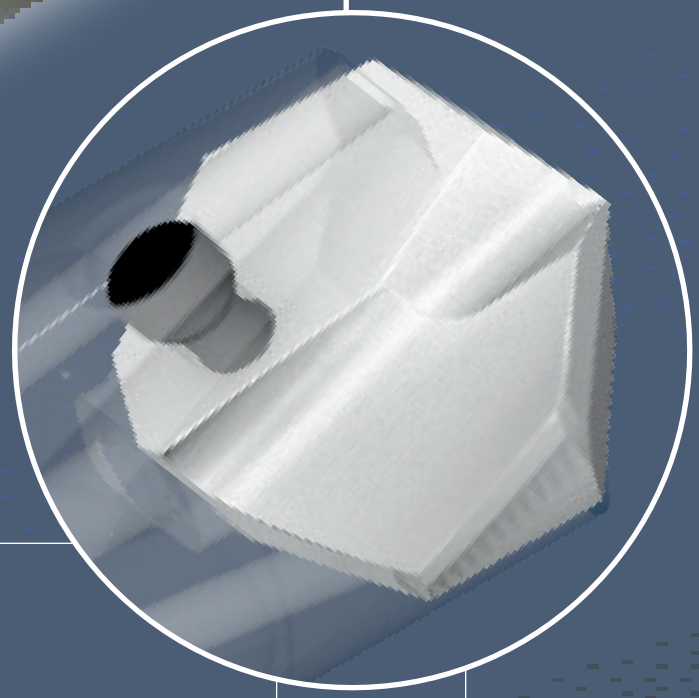

Optimised geometries

For machining of steel, stainless steel, and a variety of other materials.

Secure clamping

The interchangeable head is firmly positioned in its seat in the toolholder. This clamping mechanism protects the toolholder. Unlike other clamped interchangeable head drills, the toolholder is not stretched, making more clamping cycles possible.

Vee insert seating

For exact positioning of the cutter insert in the toolholder.
Assuring optimum concentricity, thus guaranteeing centred drilling for your application.

GARANT HiPer drill with GARANT TRI-JET system

THE ADVANTAGES OF THE FIRST SERIES TOOL PRODUCED BY ADDITIVE MANUFACTURING. THE GARANT HiPer drill IN THE Ø RANGE 8 – 12.99 mm.

Progress by use of state-of-the-art technology

Using additive manufacture, tools can - to a large extent - be designed freely.

Improved overall structure

The cooling channels are put towards the outer edge of the drill and can be adapted to the helix angles according to the Ø. This assures a more stable toolholder core and optimised flutes for improved chip clearance.

Cooling system GARANT TRI-JET:

The cooling channels in the Ø range 8 to 12.99 mm can be manufactured with triangular channels for optimum flow of coolant. **Twice** the amount of coolant can be delivered due to the larger cross section and the improved flow dynamics.

Optimum torsional properties

Due to their uniform microstructure, drills manufactured by the additive process have improved tensile strength and a significantly improved yield point, thus giving optimised torsional properties.

High productivity

All this enables a marked increase in stability, cutting data, chip removal, and tool life – thus increasing your productivity.

Additive manufacturing

This refers to a process by which digital 3D design data is used to build up a component in layers by depositing material, which is then fused by a strong laser beam. With the GARANT HiPer drill additive manufactuing has become a feature of series production.

This advertising brochure, its graphic layout and the item numbering system used are protected by copyright. Reprinting and reproduction of any kind – even as extracts – is only permitted with the written consent of Hoffmann GmbH Qualitätswerkzeuge, 81241 Munich, Germany. All net prices valid until 31.07.2015; prices in £, without guarantee. We reserve the right to correct errors and make changes.

Hoffmann Group®
Tools to make you better

Hoffmann GmbH
Herbert-Ludwig-Straße 4 · D-28832 Achim
Order by phone: +44 (0) 8704-176111
Order by fax: +44 (0) 8704-176113

Order by E-Mail: ab.uk@hoffmann-group.com
www.hoffmann-group.com

KW1430EN
03913-en